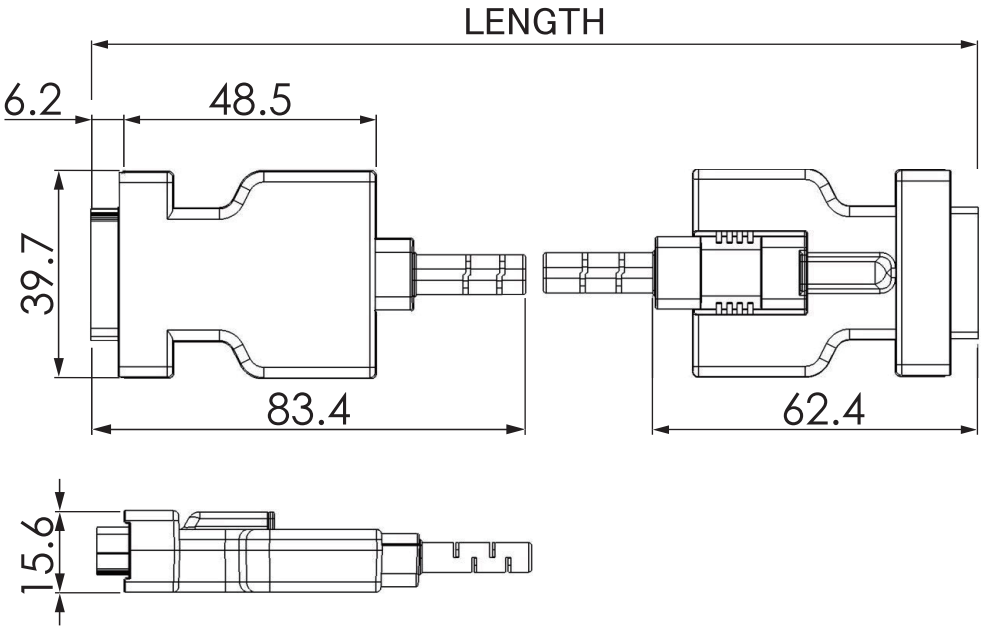

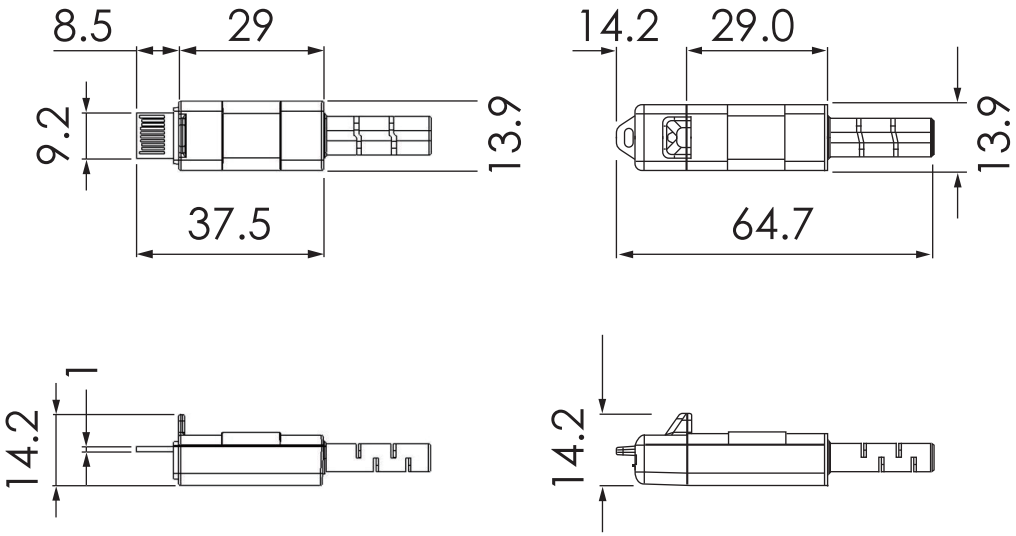

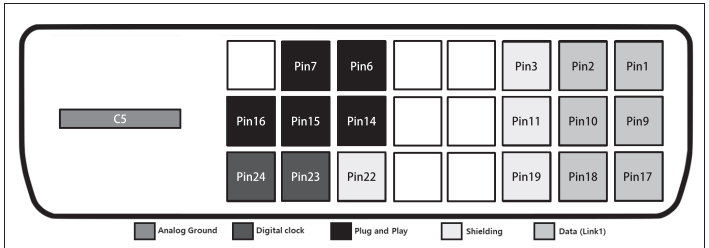

Pin 1	TMDS data 2-	Pin 16	Hot Plug Detect
Pin 2	TMDS data 2+	Pin 17	TMDS data 0-
Pin 3	TMDS data 2 shield	Pin 18	TMDS data 0+
Pin 4	N/A	Pin 19	TMDS data 0 shield
Pin 5	N/A	Pin 20	N/A
Pin 6	DDC clock	Pin 21	N/A
Pin 7	DDC data	Pin 22	TMDS clock shield
Pin 8	N/A	Pin 23	TMDS clock+
Pin 9	TMDS data 1-	Pin 24	TMDS clock-
Pin 10	TMDS data 1+	C1	N/A
Pin 11	TMDS data 1 shield	C2	N/A
Pin 12	N/A	C3	N/A
Pin 13	N/A	C4	N/A
Pin 14	+5V	C5	Analog Ground
Pin 15	Ground		

<Male DVI-D Single Link Pin Assignment>

PHYSICAL CHARACTERISTICS

Parameter	Value	Unit
Cable Assembly		
Cable Type	Hybrid Cable Plastic Optical Fibers and Electrical Wires	
Cable Demensions (W x H)	5.10 x 2.90	mm
Cable Color	Aqua	
Connector Pull Strength	20	kgf
Mimimum Bend Radius	5	mm
Case Material	PC(Polycarbonate)	

Model Number	Length
ADO-10P	10000 -0 +500
ADO-15P	15000 -0 +500
ADO-20P	20000 -0 +500
ADO-30P	30000 -0 +500
ADO-40P	40000 -0 +500
ADO-50P	50000 -0 +500
ADO-100P	100000 -0 +500

ADTECHNO http://www.ad-techno.com/

SCALE	-	REV.	A
UNIT	MM		
SHEET	1/1	DWG NO.	
DATE	2018/3		

TITLE

MODEL NO. ADO-xxP